MARITIME ELECTRIC
A FORTIS COMPANY

RECEIVED
JUL 1 9 2011
The Island Regulatory
and Appeals Commission

July 13, 2010

Island Regulatory & Appeals Commission
PO Box 577
Charlottetown PE C1A 7L1

Dear Commissioners:

Please find enclosed 10 copies of Maritime Electric's 2012 Capital Budget.

If you require further information, please do not hesitate to contact me at (902) 629-3679.

Yours truly,

MARITIME ELECTRIC

J. W. Geldert
Vice President, Finance, Administration
& Chief Financial Officer

JWG44
Encl. as noted

PO Box 1328, 180 Kent Street, Charlottetown, PEI C1A 7N2
Tel. 1-800-670-1012, Fax 902-629-3665, Web Site www.maritimeelectric.com

Schedule A

MARITIME ELECTRIC
A FORTIS COMPANY

2012 CAPITAL BUDGET EVIDENCE

MARITIME ELECTRIC COMPANY, LIMITED
2012 CAPITAL BUDGET EVIDENCE

SECTION:

MARITIME ELECTRIC COMPANY, LIMITED
2012 CAPITAL BUDGET EVIDENCE

INTRODUCTION

Under Section 17 (1) of the Electric Power Act, Maritime Electric is required to submit to the Island Regulatory and Appeals Commission, for its approval, an annual Capital Budget of proposed improvements or additions to the property of the public utility. This is the evidence in support of the Company's proposed 2012 Capital Budget. Schedule 1-1 outlines the level of the Company's actual and proposed capital expenditures over the 2003-2012 period.

MARITIME ELECTRIC COMPANY, LIMITED

2012 CAPITAL BUDGET EVIDENCE

SUMMARY OF CAPITAL EXPENDITURES 2003 – 2012

	2003	2004	2005	2006	2007	2008	2009	2010	2011	2012
	Actual	Actual	Actual	Actual	Actual	Actual	Actual	Actual	Forecast	Budget
Generation										
Charlottetown Plant	1,847,238	11,069,416	20,704,628	3,855,935	1,454,480	1,645,014	907,390	974,905	1,133,000	1,768,000
Borden Plant	540,650	110,617	407,981	132,664	666,496	162,289	1,263,651	64,719	1,284,000	1,205,000
	2,387,888	11,180,033	21,112,609	3,988,599	2,120,976	1,807,303	2,171,041	1,039,624	2,417,000	2,973,000
Distribution and Transmission										
Distribution	8,182,087	9,874,267	10,785,945	11,291,216	15,216,155	15,199,296	15,982,270	16,066,121	16,971,000	17,572,000
Transmission	3,444,327	1,472,756	1,538,732	6,283,295	4,387,363	12,226,942	5,437,318	2,147,002	2,537,000	4,605,000
	11,626,414	11,347,023	12,324,677	17,574,511	19,603,518	27,426,238	21,419,588	18,213,123	19,508,000	22,177,000
Corporate	565,772	670,675	741,851	754,751	765,915	732,796	547,743	726,626	1,072,000	1,083,000
Sub-total	14,580,074	23,197,731	34,179,137	22,317,861	22,490,409	29,966,337	24,138,372	19,979,373	22,997,000	26,233,000
Capitalized General Expense	1,480,401	1,538,836	1,667,818	1,844,273	1,845,861	1,982,504	2,190,512	2,179,629	375,000	402,000
Interest During Construction	260,671	531,862	2,174,493	637,555	409,683	319,302	321,691	317,828	210,000	200,000
	16,321,146	25,268,429	38,021,448	24,799,689	24,745,953	32,268,143	26,650,575	22,476,830	23,582,000	26,835,000
Less: Customer Contributions	(640,905)	(820,622)	(615,754)	(657,278)	(3,511,826)	(11,438,104)	(5,313,287)	(532,001)	(350,000)	(275,000)
Net Capital Expenditures	15,680,241	24,447,807	37,405,694	24,142,411	21,234,127	20,830,039	21,337,288	21,944,829	23,232,000	26,560,000

MARITIME ELECTRIC COMPANY, LIMITED

2012 CAPITAL BUDGET EVIDENCE

			2012
Generation			
G-1	Charlottetown Plant Building and Services Projects	$	306,000
G-2	Charlottetown Plant Boiler Projects		870,000
G-3	Charlottetown Plant Turbine-Generator Projects		592,000
G-4	Borden Plant Projects		1,205,000
			2,973,000
Distribution			
D-1	Replacements due to Storms, Collision, Fire and Road Alterations		1,145,000
D-2	Distribution Transformers		3,475,000
D-3	Services and Street Lighting		3,718,000
D-4	Line Extensions		1,558,000
D-5	Line Rebuilds		4,091,000
D-6	System Meters		1,226,000
D-7	Distribution Equipment		1,499,000
D-8	Transportation Equipment		860,000
			17,572,000
Transmission			
T-1	Substation Projects		1,039,000
T-2	Transmission Projects		587,000
T-3	Y-104 Project		2,979,000
			4,605,000
Corporate			
C-1	Corporate General		127,000
C-2	Information Technology		956,000
			1,083,000
Sub-total			26,233,000
Capitalized General Expense			402,000
Interest During Construction			200,000
Less: Customer Contributions			(275,000)
Total		$	26,560,000

MARITIME ELECTRIC COMPANY, LIMITED
2012 CAPITAL BUDGET EVIDENCE

GENERATION

The Role of Maritime Electric On-Island Generation

Maritime Electric has three on-Island generation facilities that are maintained and staffed on a stand-by basis. Those facilities are:

Charlottetown Thermal Generating Station	5 Generators	60 MW
Borden Generating Station	2 Generators	40 MW
Combustion Turbine # 3 (CT3)	1 Generator	50 MW

Although the primary role of Maritime Electric's generation is one of backup for the existing submarine cables, other significant benefits are realized through reduced purchased energy costs. The Charlottetown Thermal Generating Station (Charlottetown Plant) serves as capacity backup to Assured Energy purchases from NB Power; CT3 provides the capacity backup to the Secure Energy purchases and the Borden facilities provide operating reserve capacity. The combined annual value of the avoided capacity and operating reserve purchases is approximately $4.8 million based on the current Energy Purchase Agreement with NB Power. In addition, this generation provides on-Island supply in times of supply curtailment from its off-Island energy suppliers. It also supplies energy during transmission line outages in New Brunswick or PEI. Other benefits of on-Island generation include:

- operational flexibility during times of local transmission outage or limitations;
- voltage control during peak load times; and
- establishes an upper cap on emergency energy purchases during time of supply curtailment from mainland sources.

Management recognizes that the cost of produced electricity from the Company's on-Island generation facilities is high, however, the primary role of the generating units is not energy production but the following:

- Submarine cable load management. The total capacity of the two submarine cables linking the PEI transmission system to the NB transmission system is 200 MW, however, the peak load for PEI has exceeded 220 MW. During periods when the load is above 200 MW, on-Island generation is required to ensure the submarine cables do not become overloaded. The installation of a third cable will negate this role, however, until such time as the cable is installed and operational, on-Island generation must be maintained and functional for cable loading management. Due to its intermittent nature, wind energy is not considered for this role.
- Contingency planning such as back up of off-Island energy purchases in the event of a submarine cable failure similar to the incident that occurred in December 1997. During that 26 day outage the Charlottetown Plant provided the majority of replacement energy supply with Borden generation used for peaking. That submarine cable outage occurred during the Company's peak load period. With the addition of a third cable the need for on-Island generation for cable contingencies is reduced.
- Contingency planning for off-Island transmission failures. If one or both of the 138 kV transmission lines in New Brunswick supplying PEI were to fail, on-Island generation would be required to service load in PEI even with the addition of a third cable linking the PEI and NB electrical systems.
- On-Island generation provides a price cap in the event of off-Island supply curtailments. In the past, electricity prices have exceeded $1,000/MWh and in such instances on-Island generation is more economic.
- Operational flexibility during times of local transmission outage or limitations. At times the Company has to take out transmission elements for scheduled or unplanned maintenance and/or repair, that requires on-Island generation to maintain service to customers.
- Voltage control during peak load times.
- A source of black start capability. The Company's combustion turbines are a source of black start capability.
- A source of ancillary services. In addition to an electric utility being required to meet its load requirements, utilities must have enough quick start standby generation (Operating Reserve) to accommodate 100 per cent of the loss of the largest generator on the

system and 50 per cent of the loss of the second largest generator on the system at all times. In the Maritime Area (New Brunswick, Northern Maine and PEI) the two largest generators are located in New Brunswick and this standby requirement is shared on a load ratio basis. The Company's three combustion turbines provide its share of these reserve requirements.

- A source of capacity for energy purchases. All energy purchases must be backstopped with capacity. The Company's generation fleet contributes to lowering the cost of purchased energy every day as a capacity credit.

The Production Capital Budget has traditionally been a zero based budget made up of projects required to keep the generating facilities in a state of readiness to meet reliability concerns and operating considerations as dictated by the Company's Energy Purchase Agreement with NB Power, safety regulations, boiler inspection branch recommendations, cable overloading, contingency planning and insurance requirements. With the potential for funding for a third transmission cable linking the Maritime Electric transmission grid to the New Brunswick transmission system, the short term expenditures at the Charlottetown Plant have been re-evaluated. A third cable would reduce the role of the Charlottetown Plant for cable overload purposes and reliability backup. In light of this, the 2012 Production Capital Budget was developed with the aim of deferring or postponing Charlottetown Plant specific projects as much as possible, keeping in mind that safety and reliability cannot be compromised.

MARITIME ELECTRIC COMPANY, LIMITED

2012 CAPITAL BUDGET EVIDENCE

G-1 Charlottetown Plant Buildings and Services Projects ***$ 306,000***

The G-1 category includes expenditures required for buildings and support systems for the Charlottetown Plant facilities. Support systems include but are not limited to:

- the Energy Control Centre (ECC) – provides 24 hour operation of the Maritime Electric electrical system including energy purchase, load and wind forecasting, generation dispatch and line crew dispatch;
- the river pumphouse – provides cooling water for the thermal generation units at the Charlottetown Plant;
- fuel tanks – provide storage of fuel for a minimum of 7 days generation at full load;
- lighting – provides for lighting within the Charlottetown generation facilities; and
- other equipment such as sump pumps and fuel pipe lines.

1. Charlottetown Plant Roof Refurbishment **$ 67,000**

A sloped section of the roof needs to be replaced as the surface which protects the underlying roof materials has deteriorated. This work was identified in September 2010. Failure to complete this work in a timely fashion could lead to future leaks and cause damage to plant equipment located below such as: Boiler 6, Turbine 7, computer room for Turbines 9 and 10 controls and the backup generators for the 50 MW Combustion Turbine.

2. Charlottetown Plant Miscellaneous Buildings and Services **$ 239,000**

A provision has been made for a number of smaller projects which have been identified for the Charlottetown Plant:

- Parts Storage Improvements $ 10,800

  This is a provisional amount, based on experience, to improve the parts storage system. This includes areas such as the steel storage area, the tool crib and caged stores in West Royalty and the Charlottetown Plant.

MARITIME ELECTRIC COMPANY, LIMITED
2012 CAPITAL BUDGET EVIDENCE

- Door and Window Replacements $ 11,100

  This is a provisional amount, based on experience, to replace plant doors and windows.

- Process Pipeline Replacements $ 22,300

  This is provision to replace sections of process piping (city water, chemical, fuel, propane, condensate, steam) that are corroded and require upgrading.

- Emergency Lighting $ 5,300

  Improvements required to the Plant's emergency lighting system.

- Lighting Improvements $ 11,100

  Improvements required to the Plant's lighting system.

- Safety Equipment $ 11,100

  This is a provisional amount, based on experience, for replacements and upgrades of safety equipment and gear for confined space rescue, confined space entry, industrial hygiene and health and first aid.

- Sump Pump Replacements $ 22,300

  All stationary sump pumps in the Charlottetown Plant were installed in 1996 and operate in a corrosive environment. An amount is being budgeted each year to replace one unit per year with priority based on condition.

MARITIME ELECTRIC COMPANY, LIMITED

2012 CAPITAL BUDGET EVIDENCE

- Refurbish ECC Roof and Interior Renovations $ 44,500

  Operations have changed at the Energy Control Centre over the past year making it necessary to make modifications to the facility. The modifications will re-locate the SCADA equipment, improve control room lighting and add a desk for a Daytime ECC Operator. Repairs will also be made to the Energy Control Centre roof.

- Security Enhancements $ 31,200

  Provides for the installation of a card reader security system for access to the Production Facilities in Charlottetown.

- ECC SCADA Screen Display $ 33,400

  This provides for the hardware and software required to utilize the new mimic screen in multi split screen mode.

- Other Miscellaneous Projects $ 35,900

MARITIME ELECTRIC COMPANY, LIMITED
2012 CAPITAL BUDGET EVIDENCE

G-2 Charlottetown Plant Boiler Projects $ *870,000*

The G-2 category covers expenditures for the boilers and boiler systems associated with the Company's thermal generating units. The boiler typically includes numerous sub-systems required for operation such as: fuel oil system, combustion air system, burner safety management system, auxiliary steam system, feedwater system, sootblower system, boiler chemicals system, instrument air system, boiler furnace; boiler steam tubing, smoke stacks, emission monitoring system, boiler control and emission control equipment.

1. Sulphuric Acid Tank System $ 63,000

In 2005 the Company installed a new water treatment plant as part of the 50 MW combustion turbine project. In 2008 the Company made piping modifications so that the new water treatment plant could also be used to supply make-up water for the boilers in the Charlottetown Plant. As a result, the original Plant water treatment system is now used only sparingly with reduced usage of sulphuric acid. This project will involve replacing the existing 17,000 litre sulphuric acid tank which was installed in 1968 with a new tank which is sized more appropriately for the current usage rate. This will reduce the risks associated with storing this chemical in bulk quantities as well as the concern associated with the carbon steel tank which has stored sulphuric acid for 43 years.

2. Overhaul Dampers on Forced/Induced Draft Fans $ 73,000

The scope of this work is to overhaul all four fan units for Units 9 and 10 by replacing all controls, bearings, linkages and other parts that are worn. This work needs to be carried out as the reliability of the combustion control in the boilers has become unacceptable. The dampers act to control the air at less than full load flow and to maximize efficiency by increasing the pressure, and pumping the air to the boiler.

MARITIME ELECTRIC COMPANY, LIMITED

2012 CAPITAL BUDGET EVIDENCE

3. Refurbish Air Preheaters on Units 9 and 10 $ 506,000

The air preheaters on Units 9 and 10 were installed 48 and 43 years ago respectively and are subject to a corrosive service environment. The structural steel framework and support system has been corroded to such an extent that extensive modifications are required to keep these units operational. The scope of this work is to have the air heater's steel frame, baskets and supports rebuilt on site. If the air preheater fails, the combustion air will not be preheated to design temperatures causing reductions in thermal efficiency and thus a downrating of the output of the steam turbine.

4. Testing of Generating Bank Tubes on Units 9 and 10 $ 51,000

Non-destructive testing is required to measure the thinning of generating bank tubes. The generating bank tubes are the connection between the steam drum and the mud drum in a boiler and uses natural circulation. The hot water and steam mixture rises in the tubes in the generating bank, from the mud drum to the steam drum, where the steam is separated from the water and rises to the top of the steam drum. The flow of water up the tubes of the steam-generating bank must be maintained, otherwise the tubes would quickly melt. Tube thinning is common in generating bank tubes due to the erosion caused by sootblowers cleaning off the surface of these tubes. Test results will be compared against previous measurements to determine the rate of thinning and when tube replacement will be required. Tube failure could result in catastrophic failure of the boiler rendering it inoperable for an extended period and exposing staff to an unsafe work environment.

MARITIME ELECTRIC COMPANY, LIMITED
2012 CAPITAL BUDGET EVIDENCE

5. Miscellaneous Boiler Projects **$ 177,000**

A provision has been made for a number of smaller boiler projects which have been identified at the Charlottetown Plant.

- Miscellaneous Tool Replacements $ 15,200

  This is a provisional amount to purchase new or replacement tools for the Plant's Electrical and Instrumentation Shop.

- Large Motor Refurbishment $ 7,600

  Based on experience a provisional amount is included in the budget to rewind a large motor each year.

- Miscellaneous Boiler Improvements $ 50,500

  Each year the Plant's power boilers are inspected before being laid up for the Summer. These inspections identify tube replacements and upgrades that must be completed before the next startup. This provisional amount is contingent on inspection results.

- Boiler Insulation Replacement Improvements $ 63,000

  The Plant was constructed during a period when insulating materials often contained asbestos. This insulation degrades over time and must be replaced to prevent airborne Asbestos Containing Material (ACM) from endangering the health of workers. The Company has a policy of immediate replacement of any ACM found to be in poor condition. This is a provisional amount based upon past experience for asbestos replacement related to the steam boilers.

MARITIME ELECTRIC COMPANY, LIMITED

2012 CAPITAL BUDGET EVIDENCE

- Magnesium Hydroxide (MgOH) Piping Refurbishment $ 31,500

  To address acid smut issues arising from stack emissions during boiler operations, chemicals are injected into the process to neutralize acids produced. MgOH is used for this purpose. Over time, the inside surfaces of the MgOH piping system have become partially blocked with hardened magnesium hydroxide powder which has interacted with moisture in the air. The piping will be refurbished to unplug the lines so that the powder can flow freely again.

- Fuel Pump Replacement $ 9,200

  A 1972 vintage fuel pump has been identified for replacement as performance has degraded to an unacceptable level.

MARITIME ELECTRIC COMPANY, LIMITED
2012 CAPITAL BUDGET EVIDENCE

G-3 Charlottetown Plant Turbine-Generator Projects ***$ 592,000***

The G-3 category covers expenditures associated with the steam turbines, generators and the 50 MW combustion turbine (CT3). The steam turbines and generators include such systems as: main steam system, auxiliary steam system, bleed steam system, lube oil system, relay oil system, cooling and auxiliary cooling water systems, air extraction system, condensate system, generator excitation system and vibration monitoring system.

1. Replace Generator Automatic Voltage Regulation on Unit 10 $ 225,000

During recent operation, problems with the Automatic Voltage Regulation on No. 10 generator were experienced and resulted in the unit producing unacceptably high voltage levels which tripped the unit off. These voltage exceedances are not acceptable as they deteriorate the electrical insulation on the copper windings and impair the reliability of the machine. Repeated excursions beyond the designed maximum voltage rating of the insulation on the copper windings will lead to failure of the generator. This critical replacement is required to ensure continued reliability and availability of the generator.

2. Condenser Brush Replacement on Unit 9 $ 87,000

This project consists of condenser brush and cage replacements to ensure the condenser tubes remain clean and free of blockages. Tube blockages can reduce turbine efficiency and ultimately the availability of the unit. Each tube in the condenser is fitted with two cage assemblies attached at either end of the tube.

MARITIME ELECTRIC COMPANY, LIMITED

2012 CAPITAL BUDGET EVIDENCE

3. Replace Cooling Water Strainer on Unit 9 **$ 53,000**

The existing cooling water strainer on Turbine 9 has corroded to the point where the equipment is not functional and replacement is required. The cooling water strainer removes dirt and unwanted debris from the cooling water stream prior to it passing through the steam turbine's condenser tubing. Failure to remove this unwanted debris from the water stream could cause damage to the condenser tubes and other equipment located downstream.

4. Miscellaneous Turbine Projects **$ 227,000**

A provision has been made for a number of smaller projects which have been identified for the turbines at the Charlottetown Plant:

- Turbine Insulation (Asbestos) Replacement $ 75,000

  The Plant was constructed during a period when insulating materials often contained asbestos. This insulation degrades over time and must be replaced to prevent airborne Asbestos Containing Material (ACM) from endangering the health of workers. The Company has a policy of immediate replacement of any ACM found to be in poor condition. This is a provisional amount based upon past experience for asbestos replaced associated with the steam turbines.

- Steam Turbine Improvements $ 38,000

  Each year the Plant's steam turbines are inspected before being laid up for the Summer. These inspections identify replacements and upgrades that must be completed before the next startup. This provisional amount is contingent on inspection results.

- Lube Oil System and Tank Refurbishment $ 37,500

  The lubricating oil system for Turbines 9 and 10 is aged and contains particle counts (dirt/debris) in the oil that exceed the recommended limits. This project will see the oil system refurbished.

MARITIME ELECTRIC COMPANY, LIMITED
2012 CAPITAL BUDGET EVIDENCE

- Battery Bank Discharge Capacity Test Equipment $ 19,000

  The Company's insurers have recommended certain testing for station service battery banks supplying tripping power to circuit breakers. This is a provision to purchase the necessary test equipment.

- Combustion Turbine Improvements $ 37,800

  Improvement and upgrade requirements will become more prevalent as combustion turbine CT3 accumulates operating hours, therefore, this provisional amount is to address any operational efficiencies that arise during the year.

- Other Miscellaneous Projects $ 19,700

MARITIME ELECTRIC COMPANY, LIMITED

2012 CAPITAL BUDGET EVIDENCE

G-4 Borden Plant Projects ***$ 1,205,000***

This category provides for expenditures related to the facilities at the Borden Plant which are stand-by and peaking units that also supply ancillary services needed for reliability purposes. The Borden Generating Station houses two diesel fueled combustion turbines ("CT1" and "CT2") rated at a combined 40 MW. This facility also includes: three diesel fuel storage tanks; a fuel tanker truck offloading facility; a maintenance building; two control rooms; lube oil storage building; a storage building for a spare length of submarine cable and a 69 kV substation with two step-up transformers.

1. Mechanical Overhaul of Combustion Turbine 2 (CT2) **$ 1,178,000**

The last mechanical overhaul of CT2 was completed in 2001. This project will include the on-site inspection and overhaul of the combustion turbine compressor, combustors, power turbine, gear box and shaft. Major equipment overhauls are recommended at a minimum of every ten years for standby generation equipment as per the recommendations of the Original Equipment Manufacturer (OEM) and insurance carriers. A budget estimate has been prepared that includes a provisional amount, based on experience, for needed repairs and/or parts identified in the inspection phase of the project.

2. Miscellaneous Borden Projects **$ 27,000**

A provision has been made for enclosure renovations for both Borden units. The Borden units are located adjacent to the Northumberland Strait and salt spray can cause significant corrosion damage to the turbine enclosures. A provisional amount, based on previous experience, is included in the budget each year for needed repair work including sandblasting, metal patching and replacement, and painting.

MARITIME ELECTRIC COMPANY, LIMITED
2012 CAPITAL BUDGET EVIDENCE

DISTRIBUTION

The Field Audit and Assessment Project conducted by the Company during 2009 collected data on all transmission and distribution system assets including poles, conductors, transformers and cutouts. The data included the condition and count of the specified equipment. This information has provided the Company with the information required to make decisions with respect to the prioritization of line rebuilds. The 2009 data highlighted the fact that there still exists close to 20,000 eastern cedar (untreated) poles in the system and that 2,600 poles were assessed as poor or rejected. The majority of the eastern cedar poles are 40 years or older and approaching the end of their useful life. In addition, these poles, with few exceptions, support crossarms, insulators and conductor of the same vintage.

The 2011 Capital Budget provided for expenditures for rebuilds (D-5-1) of approximately $2.2 million and for pole for pole replacement (D-5-2) of $0.7 million. This allows for the planned replacement of approximately 1,500 poles or approximately 1.3 per cent of the roughly 120,000 poles in the T&D system (see Company Response #4 to the PEI Government PEI Interrogatories on the 2011 Capital Budget) under the rebuild and pole for pole replacement programs.

In light of the number of aged eastern cedar poles approaching the end of their useful life, the number of poles assessed as poor or rejected and the current 1.3 per cent rate for planned pole replacements, the Company is proposing expenditures of approximately $3.0 million for rebuilds (D-5-1) and $0.7 million for the pole for pole replacement program (D-5-2) in 2012. This represents a combined increase of approximately $0.8 million, or 28.6 per cent, over 2011 expenditure levels. The increase in expenditure level will allow the Company to more readily address the issue of the aged infrastructure within the system and improve reliability, voltage and losses.

MARITIME ELECTRIC COMPANY, LIMITED

2012 CAPITAL BUDGET EVIDENCE

D-1 **Replacements due to Storms, Collision, Fire and Road Alterations** ***$ 1,145,000***

This is a provisional amount for replacements due to storms, motor vehicle accidents, fire and road alterations. Actual costs charged to this account over the 2007-2010 period exceeded the budget provision in those years due primarily to extraordinary weather events, accelerated infrastructure spending for highway widening, bridge improvements and the installation of roundabouts by the Provincial Government. The budget provision is for normal weather events and traditional levels of Government road widening activity.

MARITIME ELECTRIC COMPANY, LIMITED
2012 CAPITAL BUDGET EVIDENCE

D-2 Distribution Transformers ***$ 3,475,000***

This provides for the purchase and installation of transformers and related equipment to serve new customers, address load growth for existing customers and to replace deteriorated units. The Spill Prevention Program targets approximately 200 polemount transformers that were manufactured before 1982 and were identified for replacement. An amount for the replacement of transformers under the Spill Prevention Program is also included.

Pole Mounted kVA			
5 year average annual requirement		37,200 kVA	
Spill Prevention Program		2,700 kVA	
Total		39,900 kVA	
Cost			
Purchase	39,900 kVA @	$65.54/kVA	$ 2,615,000
Installation	39,900 kVA @	$9.87/kVA	393,800
Sub-total			3,008,800
Pad Mounted kVA			
5 year average annual requirement		12,500 kVA	
Cost	12,500 kVA @	$37.30/kVA	466,200
Total (Rounded)			$ 3,475,000

MARITIME ELECTRIC COMPANY, LIMITED

2012 CAPITAL BUDGET EVIDENCE

D-3 Services and Street Lighting ***$ 3,718,000***

This amount provides for the construction of distribution service lines to serve new customers, the replacement of aged service lines and the provision of street and yard lighting as requested by customers. These expenditures (and those in D-4) are expected to be partially offset by customer contributions.

1.	**Service Lines**				
	Estimate:	Single phase	$ 1,911,000		
		Three phase	$ 1,123,000	**$**	**3,034,000**
2.	**Underground Service Lines**				
	Estimate:	Single phase	$ 172,000		
		Three phase	$ 114,000	**$**	**286,000**
3.	**Street and Yard Lighting**			**$**	**398,000**

MARITIME ELECTRIC COMPANY, LIMITED
2012 CAPITAL BUDGET EVIDENCE

D-4 Line Extensions ***$ 1,558,000***

This amount provides for the extension of single phase and three phase distribution lines to serve new customers and reflects recent expenditures in this area. Long single phase extensions to accommodate new seasonal customers, alternate loop feeds on the closing of gaps in the distribution system to increase reliability and reduce line losses and extensions required due to area load growth continue to be key factors in the level of costs incurred in this account. These expenditures, like those in D-3, are expected to be partially offset by customer contributions.

MARITIME ELECTRIC COMPANY, LIMITED

2012 CAPITAL BUDGET EVIDENCE

D-5 Line Rebuilds *$ 4,091,000*

The data gathered from the Field Audit and Assessment Project is being utilized to prioritize single phase and three phase line rebuilds, pole for pole replacements, porcelain cutout replacements and other reliability improvement activities.

1. Single Phase and Three Phase Rebuilds **$ 2,991,000**

As outlined at the beginning of Section 4, the Company is proposing an increase of $820,000 over 2011 expenditure levels. This provides for the rebuilding of distribution lines, including joint use lines. Lines are prioritized for rebuild based on the condition of poles and conductors, the length of spans and historical reliability issues associated with the line. These rebuilds improve both reliability and voltage, and allow for future load growth.

Approximately 48 kilometres of single phase and 19 kilometres of three phase distribution lines are planned to be rebuilt in 2012. The details of the rebuild projects are listed in the following table:

MARITIME ELECTRIC COMPANY, LIMITED

2012 CAPITAL BUDGET EVIDENCE

Rebuild Location	Line #	KM	# of phases	Comments	2010 Customers Hrs.	2009 Customers Hrs.	2008 Customers Hrs.	2007 Customers Hrs.	2006 Customers Hrs.
Lower Newtown	VC01412	9 km	3	A mix of # 4 & #2 ACSR conductor as well as 1950's vintage Eastern Cedar poles. Poles and wire in poor condition. Distribution Line feeds 810 customers. Re-conductoring the line will reduce the losses over the life of the line.	0	861	0	0	2,773
Avondale Rd.	DM5527	2.5 km	3	#2 ACSR conductor as well as 94% of the line has Eastern Cedar poles. Poles and wire in poor condition. Distribution Line feeds 143 customers. Re-conductoring the line will reduce the losses over the life of the line.	0	0	0	0	0
Cape Bear Rd. (Rt. 18)	DV19210	5.3 km	1	#2 ACSR conductor as well as 90% of the line has Eastern Cedar poles. Poles and wire in poor condition. Distribution Line feeds 89 customers. Re-conductoring the line will reduce the losses over the life of the line.	0	0	0	0	0
Wood Islands	DV19250	1.8 km	1	#2 ACSR conductor as well as 54% of the line has Eastern Cedar poles. Poles and wire in poor condition. Distribution Line feeds 69 customers. Re-conductoring the line will reduce the losses over the life of the line.	0	0	917	0	0
Rt. 310	DM562	2.5 km	1	#2 ACSR conductor as well as 83% of the line has Eastern Cedar poles. Poles and wire in poor condition. Distribution Line feeds 137 customers. Re-conductoring the line will reduce the losses over the life of the line.	0	0	0	0	0

MARITIME ELECTRIC COMPANY, LIMITED

2012 CAPITAL BUDGET EVIDENCE

Rebuild Location	Line #	KM	# of phases	Comments	2010 Customers Hrs.	2009 Customers Hrs.	2008 Customers Hrs.	2007 Customers Hrs.	2006 Customers Hrs.
North Side Rd.	SO1375	4.5 km	1	#4 ACSR conductor as well as 38% of the line has Eastern Cedar poles. Poles and wire in poor condition. Distribution Line feeds 182 customers. Re-conductoring the line will reduce the losses over the life of the line.	20	0	1,324	115	0
Winsloe Rd.	WR1622	3 km	1	#4 ACSR conductor as well as 55% of the line has Eastern Cedar poles. Poles and wire in poor condition. Distribution Line feeds 252 customers. Re-conductoring the line will reduce the losses over the life of the line.	427	0	0	0	68
Pleasant Grove Rd.	2R1733	7.7 km	1	Engineering recommends a conversion of this line to 14.4 kV, 2/O aluminum. 2 lines are currently fed from 13.8 kV Sherwood circuit through a set of VRs (as stepdowns). They will be more suitable to be fed from Milton Brackley feeder. The voltage, losses, etc. will be improved. It will also provide ability to feed some of the Scotchfort loads, such as Grand Tracadie.	0	0	0	0	388
Sherwood Rd.	WR1662	1.8 km	3	This line is the main three phase line from the West Royalty Substation. Engineering recommends upgrading conductor size from 2/0 to 477 Cosmos to accommodate load growth. Re-conductoring the line will reduce the losses over the life of the line and improve the reliability of distribution lines downstream.	37,664	17,250	25,627	16,387	13,969

MARITIME ELECTRIC COMPANY, LIMITED

2012 CAPITAL BUDGET EVIDENCE

Rebuild Location	Line #	KM	# of phases	Comments	2010 Customers Hrs.	2009 Customers Hrs.	2008 Customers Hrs.	2007 Customers Hrs.	2006 Customers Hrs.
Rt. 226	HR7701	2.8 km	3	#4 ACSR conductor as well as 88% of the line has Eastern Cedar poles. Poles and wire in poor condition. Distribution Line feeds 242 customers. Re-conductoring the line will reduce the losses over the life of the line.	0	0	0	0	0
Albany - Searletown Rd.	AB304	3 km	3	#2 ACSR conductor as well as 50% of the line has Eastern Cedar poles. Poles and wire in poor condition. Distribution Line feeds 1267 customers. Re-conductoring the line will reduce the losses over the life of the line.	21	4,618	3,419	259	53
Belmont Rd.	SE23321	2.9 km	1	#6 A copper conductor as well as 44% of the line has Eastern Cedar poles. Poles and wire in poor condition. Distribution Line feeds 36 customers. Re-conductoring the line will reduce the losses over the life of the line.	296	0	118	0	0
Taylor Rd.	AB360	2 km	1	#6 Solid copper conductor as well as 32% of the line has Eastern Cedar poles. Poles and wire in poor condition. Distribution Line feeds 32 customers. Re-conductoring the line will reduce the losses over the life of the line.	31	0	0	0	0
Glengary Rd.	OL3123	4.6 km	1	#4 ACSR conductor as well as 64% of the line has Eastern Cedar poles. Poles and wire in poor condition. Distribution Line feeds 18 customers. Re-conductoring the line will reduce the losses over the life of the line.	0	0	0	0	0

MARITIME ELECTRIC COMPANY, LIMITED

2012 CAPITAL BUDGET EVIDENCE

Rebuild Location	Line #	KM	# of phases	Comments	2010 Customers Hrs.	2009 Customers Hrs.	2008 Customers Hrs.	2007 Customers Hrs.	2006 Customers Hrs.
Rt. 14	OL3183	3.8km	1	#2 ACSR conductor as well as 75% of the line has Eastern Cedar poles. Poles and wire in poor condition. Distribution Line feeds 69 customers. Re-conductoring the line will reduce the losses over the life of the line.	267	0	0	0	0
Freetown Rd.	AB3375 & AB3336	5.5km	1	#4 A copper conductor as well as 26% of the line has Eastern Cedar poles. Poles and wire in poor condition. Distribution Line feeds 124 customers. Re-conductoring the line will reduce the losses over the life of the line.	99	0	0	14	76
Rt. 10	AB3350	4km	1	#2 ACSR conductor as well as 82% of the line has Eastern Cedar poles. Poles and wire in poor condition. Distribution Line feeds 125 customers. Re-conductoring the line will reduce the losses over the life of the line.	119	0	0	0	0

MARITIME ELECTRIC COMPANY, LIMITED
2012 CAPITAL BUDGET EVIDENCE

2. Pole for Pole Replacement **$ 700,000**

The Company's system contains approximately 120,000 distribution poles. This budget amount is used to replace deteriorated individual poles. Approximately 700 poles are planned to be replaced in 2012.

3. Porcelain Cutout Replacement Program **$ 400,000**

Porcelain cutout failures have created system reliability issues and ernployee safety concerns. This amount provides for the priority areas targeted for the 2012 phase of this Program.

MARITIME ELECTRIC COMPANY, LIMITED

2012 CAPITAL BUDGET EVIDENCE

D-6 System Meters *$ 1,226,000*

This amount provides for the purchase and installation of revenue metering and associated equipment. Details of the amount are as follows:

1. Residential Watt-Hour Meters **$ 820,000**

The Remote Interrogation (RI) meter program has proven successful in reducing full time meter reader positions and related vehicle costs since the initiation of the Project in 2004. As the Program comes to completion further savings in meter reading staff and vehicle costs will be realized. The installation of these meters has enhanced customer service through more frequent and accurate monthly readings and this has been evident in the reduction of call volumes from customers related to the estimating process and bill accuracy. The RI meters have also improved meter reader safety through the reduction of the need to enter customers' property where risks may exist (i.e. dogs) and the risks related to Company vehicles entering and exiting hundreds of driveways every day. There are approximately 21,000 residential meters left to be converted to the RI technology in the 2011-2012 period. All single phase residential customers are expected to be converted to the new RI technology by the end of 2012.

RI meters conversion, non-magnetic suspension	10,500
Network and three phase meters	500
Total	11,000

Installed Cost: 11,000 meters @ $74.55 (rounded)

MARITIME ELECTRIC COMPANY, LIMITED
2012 CAPITAL BUDGET EVIDENCE

2. Combination Meters **$ 212,000**

Combination meters are often referred to as demand meters because they measure peak load or demand as well as energy usage. This amount budgets for customer growth and replacements due to aging and are based on historical averages.

Customer Growth	135
Replacements due to aging, vandalism	35
Total	170

Installed Cost: 170 meters @ $1,247 (rounded)

3. Miscellaneous Metering Equipment **$ 42,000**

This provides for miscellaneous metering equipment such as Measurement Canada required colored copper wire, potential transformers and current transformers for commercial installations, potential checking safety equipment, security bands, sealing rings and colored indicator tags.

4. Outdoor Metering Tanks **$ 152,000**

This provides for a new outdoor metering tank in Kensington and the replacement of aged metering tanks in Georgetown and Victoria Cross Substations.

MARITIME ELECTRIC COMPANY, LIMITED
2012 CAPITAL BUDGET EVIDENCE

D-7 Distribution Equipment *$ 1,499,000*

1. System Equipment $ 1,369,000

This provides for the replacement of aged equipment used to provide voltage support, communication, and protection and control of the Company's distribution system assets. The items identified for 2012 are shown in the following table:

MARITIME ELECTRIC COMPANY, LIMITED

2012 CAPITAL BUDGET EVIDENCE

System Equipment 2012	Material	Labour	Total
Voltage regulators, reclosers and controllers	**$ 272,000**	**$ 150,000**	**$ 422,000**
Electronic reclosers	90,000		
Recloser controllers to replace obsolete FXB controllers	32,000		
Six (6) voltage regulator controllers to replace aging units	20,000		
Six (6) voltage regulators replacement to replace aging units	120,000		
Voltage regulator and recloser parts – preventative maintenance	10,000		
Circuit Breakers/Power Transformer Upgrades	**205,000**	**$ 113,000**	**$ 318,000**
Power Transformer Refurbishment parts – preventative maintenance	20,000		
Transformer oil	30,000		
69 kV and 138 kV breaker contacts – preventative maintenance	25,000		
Annual dissolved gas analysis	25,000		
West Royalty X5 diverter switch	50,000		
Tap changer contacts – auto transformer preventative maintenance	25,000		
Power transformer oil reconditioning	20,000		
Transformer monitoring system	10,000		
Teleprotection and Relay Replacement	**126,000**	**54,000**	**180,000**
Backup IED protection relays	10,000		
Teleprotection and relay replacement	116,000		
Communication Equipment	**93,000**	**67,000**	**160,000**
Aging Battery Bank Replacement Program	20,000		
Mobile and portable radio preventative maintenance	20,000		
Software for load flow analysis	40,000		
SCADA RTU Retrofits/parts	10,000		
Vehicle road antenna and RF meters antenna	3,000		
Distribution Switches	**150,000**	**82,000**	**232,000**
Reclosure bypass switches	20,000		
13.8 kV breaker and associated protection equipment	65,000		
13.8 kV city circuit switches	50,000		
Voltage regulator bypass switches	15,000		
Test Equipment	**36,500**	**20,500**	**57,000**
Power factor test set	24,000		
Battery bank tester	12,500		
			1,369,000

MARITIME ELECTRIC COMPANY, LIMITED

2012 CAPITAL BUDGET EVIDENCE

2. **Meter Shop Equipment** $ 30,000

This provides for power quality test equipment, voltmeters and meter test equipment as required.

3. **Line Tools and Equipment** $ 100,000

This provides for the replacement of line test equipment, line safety equipment and material handling equipment as required.

MARITIME ELECTRIC COMPANY, LIMITED
2012 CAPITAL BUDGET EVIDENCE

D-8 Transportation Equipment ***$ 860,000***

The Company's transportation fleet consists of large construction vehicles, cars, small trucks, vans, pole and wire trailers and other equipment. For the large construction vehicles, the chassis are replaced approximately every 10 years. An assessment is completed on the booms to determine the timing and method of refurbishment which extends the life of the booms by approximately 10 years. Small vehicle replacements depend on age, mileage and type of service; however, the life span is approximately 5 to 10 years. The following schedule outlines the vehicles proposed for replacement or re-chassis in 2012 and the purchase of two new pole trailers and one 4-reel wire trailer.

	Vehicle	Type	Description	Age (Yrs)	Replacement Cost
1.	05-07-29	GMC Van	Meter Dept.	8	$ 35,000
2.	05-07-30	GMC Van	Meter Dept.	8	$ 35,000
3.	03-12-61	Digger Truck	Central Line Dept.	9	$ 370,000
		(New chassis and boom)			
4.	01-12-58	Bucket Truck	Central Line Dept.	13	$ 250,000
		(New chassis and refurbished boom)			
5.	New	Pole Trailer	Central Line Dept.		$ 20,000
6.	New	Pole Trailer	Central Line Dept.		$ 20,000
7.	New	4-Reel Wire Trailer	Eastern Line Dept.		$ 60,000
8.	Allowance for unforeseen capital expenditures				$ 70,000
Total					$ 860,000

MARITIME ELECTRIC COMPANY, LIMITED
2012 CAPITAL BUDGET EVIDENCE

TRANSMISSION

The Transmission category reflects the Company's activities for the expansion and replacement of the 138 kV and 69 kV transmission system. This includes transmission lines, substations, power transformers and protection devices such as circuit breakers.

T-1 Substation Projects — *$ 1,039,000*

1. Kensington Substation Completion — $ 249,000

The completion of the Kensington Substation was deferred from 2011 to allow for the purchase a 10 MVA Power Transformer for Scotchfort Substation to accommodate unforeseen load growth in the Morell area. The New Annan Substation is at the end of its life and is in need of a rebuild or replacement. The relocation of the New Annan Substation to Kensington will accommodate load growth in the Kensington area, reduce losses and improve reliability.

2. Albany Transformer — $ 320,000

This is a provision for the purchase of a 10 MVA Transformer for the Albany Substation to accommodate load growth in the area.

3. Y-109 Breaker West Royalty — $ 270,000

This is a provision for the replacement of the Y-109 KSO Breaker at the West Royalty Substation. It has become difficult to complete maintenance on this obsolete breaker (1977 vintage) as gaskets and internal parts are no longer available.

MARITIME ELECTRIC COMPANY, LIMITED

2012 CAPITAL BUDGET EVIDENCE

5. **West Royalty Control Building** **$ 150,000**

This provides for the construction of a new control building in the West Royalty Substation. The reliability of the protection and control equipment in the existing building is a concern after damage occurred due to a breaker fire. The protection and control equipment is scheduled to be upgraded to digital technology upon completion of the new control building. Breakers will be separated from the protection and control equipment.

6. **Miscellaneous Substation Projects** **$ 50,000**

This is a provision for miscellaneous substation fence upgrades and other projects that may arise during the year.

MARITIME ELECTRIC COMPANY, LIMITED
2012 CAPITAL BUDGET EVIDENCE

T-2 Transmission Projects $ *587,000*

1. 69 kV and 138 kV Switch Program $ 260,000

This is a provision to upgrade and extend the life of selected 69 kV and 138 kV switches. Specific planned upgrades and life extensions are planned for switches on transmission line T-1, T-3, T-5, T-21 and in the Sherbrooke, St. Eleanor's, Wellington and Alberton Substations.

2. Transmission Line Refurbishment $ 327,000

The 69 kV and 138 kV transmission system is the backbone of Maritime Electric's energy delivery infrastructure. This provision will help ensure system reliability through the following:

- Completion of a full scale inspection and necessary improvements to the accessibility of the ROW and refurbishment of emergency and Priority 1 deficiencies of the 69 kV T-1 transmission line running between West Royalty and Sherbrooke.
- Completion of a full scale inspection and refurbishment of emergency and Priority 1 deficiencies of the 138 kV Y-109 and Y-111 transmission lines running between West Royalty and Bedeque (including replacement of dampers).

MARITIME ELECTRIC COMPANY, LIMITED

2012 CAPITAL BUDGET EVIDENCE

T-3 Y-104 Project **$ 2,979,000**

The 69 kV transmission line T-4 between the Charlottetown Plant and the Lorne Valley Substation was built in 1965 and is approaching the end of its life. The Company has developed a plan to replace this line with a new 138 kV transmission line. The new 138 kV transmission line (Y-104) will connect West Royalty Substation to Church Road Substation. Attached is a single line diagram for the Y-104 project along with an area map showing the proposed Y-104 project concept.

The Y-104 project is a complex multi-year project which will substantially reduce electrical losses and:

- Ensure system reliability in eastern PEI;
- Accommodate future load growth in the eastern part of PEI; and
- Enable additional wind power to be installed in the eastern part of PEI.

A new 138 kV transmission line (Y-104) will be constructed from the West Royalty Substation to the Church Road Substation. A 45/60/75 MVA transformer will be installed at the Church Road Substation to support the 69 kV system in the Dingwells Mills area. The existing line T-12 from the Church Road Substation to the Eastern Kings Wind Farm will then be energized at 138 kV (this line was built to 138 kV standards). A route has to be selected to construct the 138 kV transmission line from Church Road to the West Royalty Substation, a distance of approximately 84 kilometres. New easements will have to be obtained for Y-104. Once the new 138 kV transmission line (Y-104) is constructed, a new 138 kV Substation in the Mount Stewart area will be required and T-4 will then be retired. The plan is to start at the Church Road Substation and build to the West Royalty Substation.

MARITIME ELECTRIC COMPANY, LIMITED

2012 CAPITAL BUDGET EVIDENCE

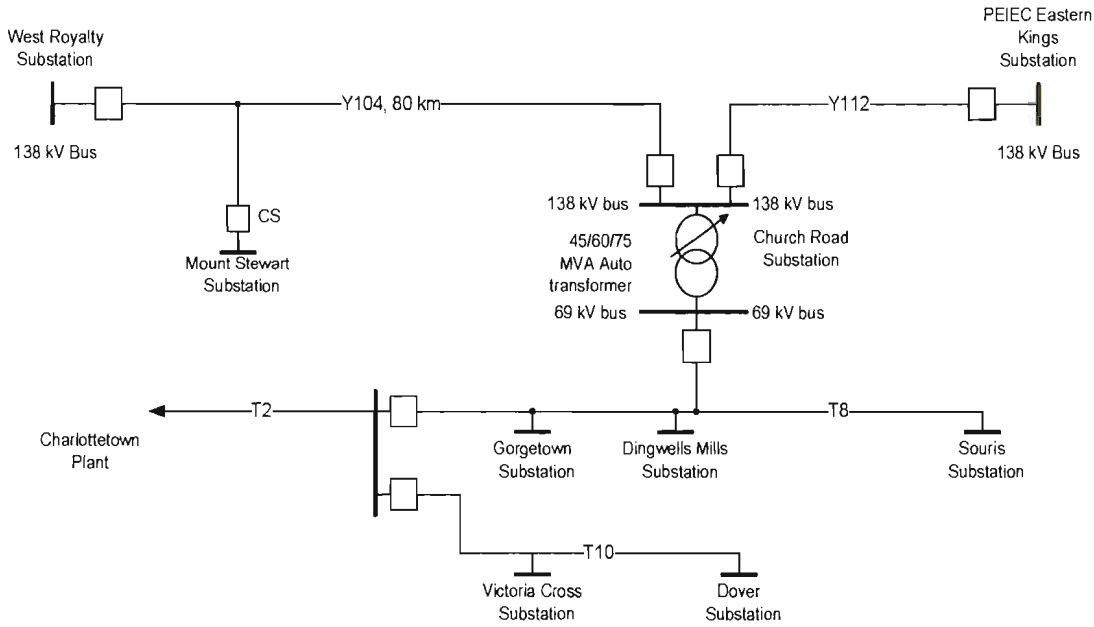

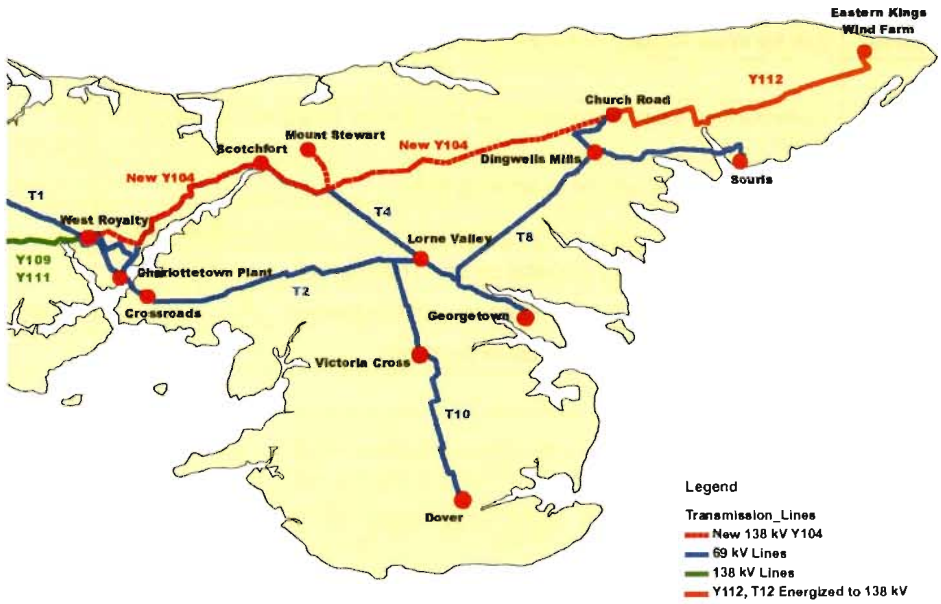

MARITIME ELECTRIC COMPANY, LIMITED

2012 CAPITAL BUDGET EVIDENCE

The Y-104 project will extend over a seven year period and will have a total estimated cost of $20 million. The current schedule for the timing of the various components is as follows:

	Y-104 Project Description	KM	Total Cost
2012	Church Road 45/60/75 Auto-Transformer, 138 kV breaker and bay		$ 2,679,000
2012	EIA for Mount Stewart Road Route 22 to Church Road		$ 300,000
	Total 2012		**$ 2,979,000**
2013	Easements from existing T-4 to Church Road		$ 750,000
	Total 2013		**$ 750,000**
2014	Construction from existing T-4 to Church Road Substation	18 km	$ 2,832,000
	Total 2014		**$ 2,832,000**
2015	Construction from existing T-4 to Church Road Substation	23 km	$ 3,600,000
2015	Church Road Substation 138 kV breaker and bay		$ 750,000
	Total 2015		**$ 4,350,000**
2016	Construction from Jenkins Road to Scotchfort Substation on existing T-4 ROW	14 km	$ 2,240,000
2016	Construction from Scotchfort Substation to Fanningbrooke Road on existing T-4 ROW	10 km	$ 1,520,000
2016	EIA for West Royalty Substation to existing T-4		$ 100,000
	Total 2016		**$ 3,860,000**
2017	Construction from Acadian Drive to Jenkins Road on existing T-4 ROW	5 km	$ 756,000
2017	West Royalty Substation to existing T-4	7 km	$ 910,000
	Total 2017		**$ 1,666,000**
2018	Mount Stewart 138 kV Substation and Transformer		$ 1,500,000
2018	Mount Stewart 138 kV Transmission Line Extension	8 km	$ 1,296,000
2018	West Royalty Substation Breaker Addition		$ 750,000
	Total 2018		**$ 3,546,000**
	Total	**85 km**	**$ 19,983,000**

The above total estimated cost may vary in future years depending on the final transmission route and system configuration.

MARITIME ELECTRIC COMPANY, LIMITED
2012 CAPITAL BUDGET EVIDENCE

1. **Church Road Substation** **$ 2,679,000**

This is a provision for the addition of a 138 kV breaker along with a 45/60/75 MVA transformer at the Church Road Substation. This will enable the operation of the T12 (Church Road Substation to the Eastern Kings Wind Farm) at 138 kV with a significant reduction in losses.

2. **Environmental Impact Assessment for the new Y-104 transmission line from Mount Stewart Road to Church Road** **$ 300,000**

As part of the requirement to upgrade the transmission system that services the Eastern end of the Island, it is proposed that a 138 kV transmission line be constructed from West Royalty to Church Road. This provision allows for route selection and an Environmental Impact Assessment to be completed. This provision is for approximately 40 kilometres of 138 kV transmission line from Mount Stewart Road (Route 22) to Church Road.

MARITIME ELECTRIC COMPANY, LIMITED
2012 CAPITAL BUDGET EVIDENCE

CORPORATE

C-1 Corporate General ***$ 127,000***

The following projects are required to ensure the safety, security and operation of the Company's facilities.

180 Kent Street **$ 90,000**

1. **HVAC Upgrades - 180 Kent Street** **$ 35,000**

   This provides for the upgrade of the baseboard heating at 180 Kent Street. The equipment was not upgraded to commercial style baseboard when the building was renovated and is inadequate during the winter months.

2. **Exterior – 180 Kent Street** **$ 25,000**

   The exterior pebble board and fascia were replaced in 2011. This expenditure is required to complete the renovations to the exterior to match the 2011 renovations.

3. **Unforeseen Capital Expenditures** **$ 30,000**

   This is a provisional amount for unforeseen capital expenditures.

Access Management System **$ 30,000**

This provides for the implementation of a formal access management system to reduce the risk of unauthorized access and potential injury at various Corporate properties.

Training Equipment **$ 7,000**

This provides for the purchase and replacement of office and audio/visual training equipment in the Service Centres.

MARITIME ELECTRIC COMPANY, LIMITED

2012 CAPITAL BUDGET EVIDENCE

C-2 Information Technology ***$ 956,000***

The Company's suite of business applications is key to ensuring operational efficiency and providing service to all customers. In order to ensure the continued effectiveness of these applications, and to meet the growing needs of all users, the Company proposes to invest a total of $956,000 in the following initiatives:

1. Hardware Acquisitions **$ 195,000**

Servers	$	60,000
Communications Equipment		30,000
Personal Computers		55,000
Printers		20,000
Installation Costs		30,000
Total	$	195,000

2. Purchased Software and Upgrades **$ 196,000**

Microsoft Agreements	$	80,000
EPICOR Financials		28,000
ESRI Mapping System		20,000
Maximo Maintenance		15,000
Anti-Virus, Firewall Software		7,000
Form Printing Software		3,000
GPS Unit Software		10,000
Development Tools		15,000
Installation Costs		18,000
Total	$	196,000

MARITIME ELECTRIC COMPANY, LIMITED
2012 CAPITAL BUDGET EVIDENCE

3. **Transformer System** **$ 40,000**

The current system used for managing the Company's transformer assets was developed in the 1990's. Efficiency gains will be achieved by rewriting the system with a focus on integration with the Service Order and Field Maintenance Systems.

4. **Unified Communication** **$ 90,000**

Unified Communication encompasses several voice related technologies including voice over internet protocol, integrated voice recognition, auto dialing, email/voicemail integration and call recording. Phase one encompasses an evaluation of existing technology in 2011. If the evaluation is successful, Management proposes to enter into a pilot project. If the pilot project proves successful, Management will gradually expand these services to all areas of the Company.

5. **Implement Financials System** **$ 180,000**

Management proposes the replacement of the existing Epicor financials reporting systems. The software is several versions behind the current release and the software developers have reduced maintenance support. The project would be a full suite implementation including general ledger, accounts payable, accounts receivable, etc.

6. **Business Intelligence Tools** **$ 65,000**

The Company has substantial information stored in its databases and a number of standard reports to extract it. Users are increasingly requesting the ability to extract and analyze data on their own. The project involves researching the market for Business Intelligence Tools to enable users to extract and format the required data, increasing productivity and reducing the demands on IT staff.

MARITIME ELECTRIC COMPANY, LIMITED

2012 CAPITAL BUDGET EVIDENCE

7. **Virtual Desk Top Pilot** **$ 30,000**

In 2010, the Company completed a project that saw most of the core servers virtualized. This process involved using powerful computers to host multiple virtual servers, providing many benefits including the more efficient use of resources, scalability of hardware and improved disaster recovery security. As a second phase of this project, IT will examine the benefits of virtualizing client machines. This project will be a ten client pilot to evaluate the potential of such an approach.

8. **OASIS Phase II** **$ 40,000**

The OASIS web site was developed to enable stakeholders to access information about Maritime Electric's transmission system. Phase two will see increased integration between the OASIS web site, the Energy Purchase System, electronic tagging software and SCADA.

9. **Inventory Management** **$ 50,000**

The Company's line inventory items are referenced by several systems. Under this project, these systems will be more tightly integrated, reducing inconsistencies between material lists, inventory numbers and item costs. This will reduce manual effort and improve accuracy and productivity.

10. **SCADA Interface** **$ 30,000**

Two recent SCADA projects, "Replicator" and "Substation Automation", enable SCADA data to be interrogated without jeopardizing security or performance. The incorporation of this data into existing business applications will make it available for reporting.

MARITIME ELECTRIC COMPANY, LIMITED
2012 CAPITAL BUDGET EVIDENCE

11. Security Systems **$ 40,000**

The current security camera infrastructure has reached its capacity. Security system software has greatly improved over the last several years providing better quality video and search capability. Management will identify a solution that will meet long-term security needs.

MARITIME ELECTRIC COMPANY, LIMITED
2012 CAPITAL BUDGET EVIDENCE

CAPITALIZED GENERAL EXPENSE — *$ 402,000*

This amount includes a portion of administrative costs (predominately labour) that are properly recognized as part of the Company's overall capital expenditure program. These recurring expenditures represent an allocation of administrative costs, not specific to any one capital project, but rather as part of the overall development, implementation and management of the Company's capital budget program.

MARITIME ELECTRIC COMPANY, LIMITED
2012 CAPITAL BUDGET EVIDENCE

INTEREST DURING CONSTRUCTION — $ 200,000

This represents an allowance for the cost of funds used during the construction of certain assets. It is reflected in the accounts as an offset to financing costs and is based on the Company's cost of borrowing. This amount is allocated to fixed assets and recovered through amortization over the life of the assets.

SCHEDULE "B"

C A N A D A

PROVINCE OF PRINCE EDWARD ISLAND

BEFORE THE ISLAND REGULATORY
AND APPEALS COMMISSION (the "Commission")

IN THE MATTER of the Application of Maritime Electric Company, Limited for approval of a 2012 Capital Budget.

We, Fred J. O'Brien, of Alberton, in Prince County, and J. William Geldert, John D. Gaudet and Steven D. Loggie, of Charlottetown, in Queens County, Province of Prince Edward Island, MAKE OATH AND SAY AS FOLLOWS:

1. THAT we are respectively the President and Chief Executive Officer, Vice-President, Finance and Administration, Vice-President, Corporate Planning and Energy Supply and Vice-President, Customer Service of Maritime Electric Company, Limited and, as such, have a personal knowledge of the matters hereto deposed to except where otherwise indicated.
2. THAT we prepared or supervised the preparation of the evidence which is, with this affidavit, attached as Schedule "A" of the application to which this affidavit is attached.
3. THAT the 2012 Capital Budget is based on the PEI Energy Accord.
4. THAT the information included in the evidence is true and correct.

SEVERALLY SWORN to at the city of Charlottetown, County of Queens Province of Prince Edward Island by Fred J. O'Brien, J. William Geldert, John D. Gaudet and Steven D. Loggie on the 13th day of July, 2011.

A Commissioner for Taking Affidavits in the Supreme Court.

Fred J. O'Brien

J. William Geldert

John D. Gaudet

Steven D. Loggie